TACHOGRAPH CONTROL - CF0006UNTC11
Installation Manual

COS'E' TACHOGRAPH CONTROL?

The **TACHOGRAPH CONTROL** module is a multiprotocol service interface capable of providing the **tachograph** with the speed data required for the instrument to perform the recordings mandated by European regulations.
The module is compatible with various CAN bus systems (**CAN 2.0 and CAN FD**). It also supports the **SAE J1939, SAE J2284, and ISO 15765** protocols. CAN bus profiles are recognized automatically. ISO 15765 profiles (standard OBD diagnostics) and J1939 profiles must be configured manually.

Default configuration:
Output 1 → ignition-switched positive (+ after ignition ON) on the PINK wire, maximum 1 A.
Output 2 → tachograph signal (23,000 pulses/mile) on the GREY wire (100 mA negative signal with pull-up).

CONNECTIONS

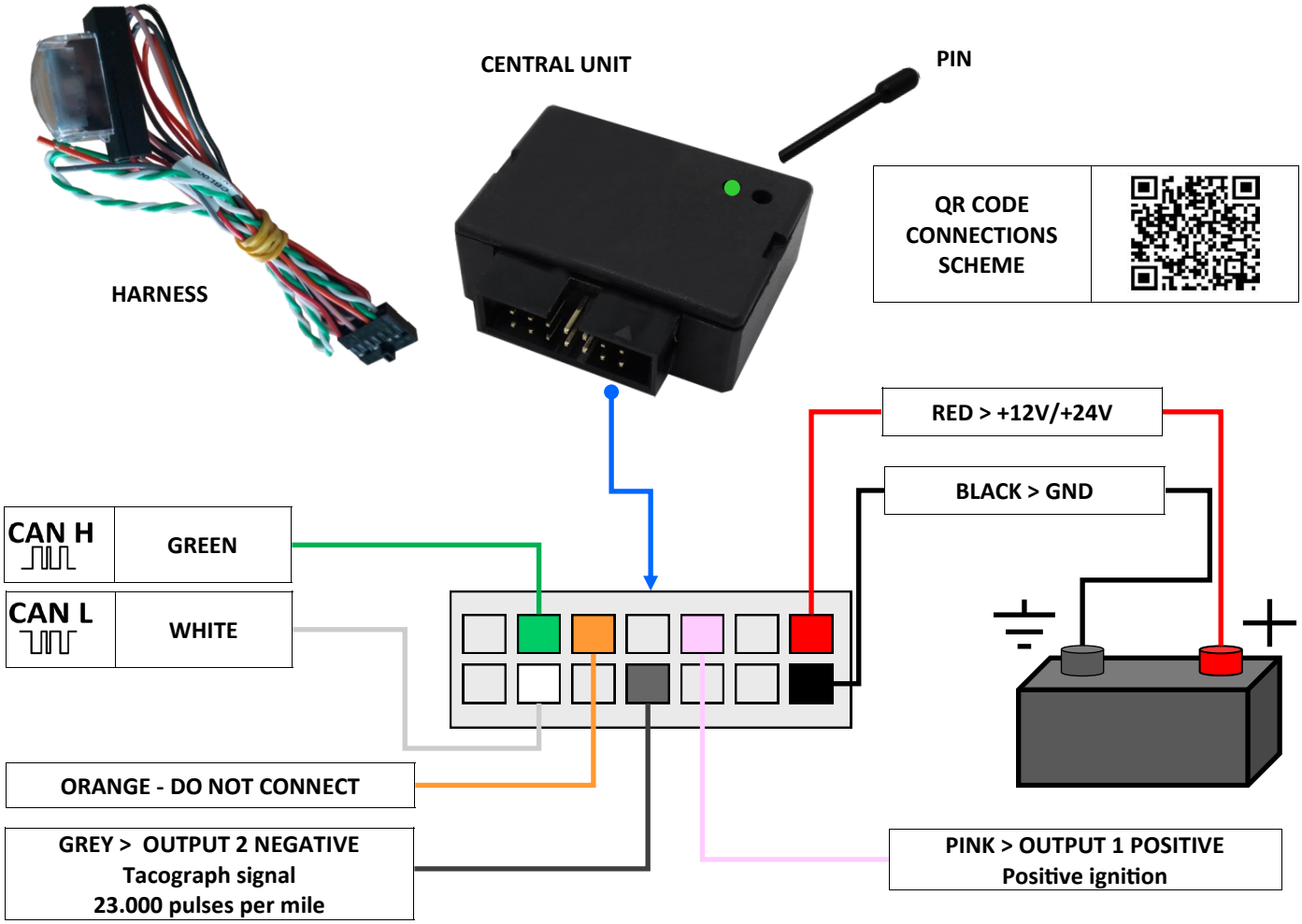

WARNING!
Connect the unit wiring harness to the vehicle without the module connected to its cable assembly. Once all connections have been properly completed, switch the vehicle ignition on while keeping the brake pedal depressed, then connect the module. After a few seconds, the LED should illuminate green. Once the module has started correctly, the output configurations can be modified if necessary.

TACHOGRAPH CONTROL - CF0006UNTC11
Installation Manual

HOW TO RESET THE VEHICLE PROFILE

This procedure must be performed every time the module is moved to a different vehicle.
To reset the vehicle profile:

Press and hold the module button for **10 seconds**.
The LED will turn off, confirming that the reset has been performed.
Release the button.
The LED will flash **red** and then **green** once the automatic detection process has identified the new vehicle.

TECHNICAL FEATURES	
WORKING CURRENT	**10/30 VDC**
CONSUMPTION IN SLEEP MODE	**1 mA**
CONSUMPTION IN WORKING MODE	**Da 100 mA a 1 A**
MAXIMUM POWER AVAILABLE ON OUTPUT 1	**1 A**
MAXIMUM POWER AVAILABLE ON OUTPUT 2	**100 mA**

WARRANTY CONDITIONS

The product is covered by a 2-year warranty against any manufacturing defects.
For warranty purposes, the proof of purchase shall be considered the valid document establishing the warranty period.

PLEASE READ THE INSTRUCTIONS CAREFULLY BEFORE CONTACTING TECHNICAL SUPPORT.
Contact Technical Support only if the vehicle is present and the module is available on-site.

Technical Support: (+39) 0141 947676

The information contained in this manual is provided for informational purposes only and is therefore subject to change without prior notice.
At the time of publication, the information is considered accurate and reliable; however, Paser cannot be held responsible for any consequences arising from errors or omissions in this manual. Paser reserves the right to improve or modify the product or the manual without any obligation to notify users.